MADRAS (FORT) RADIO FIELD INTENSITY MEASUREMENTS AT BANGALORE.

By K. Sreenivasan.

SYNOPSIS.

The paper describes the apparatus set up at the Radio Laboratory of the Institute to measure the field strength of radio stations working at frequencies less than 10^5 cycles per second. The method adopted is that developed by J. Hollingworth at the National Physical Laboratory. The working of the apparatus and the precautions taken to secure accuracy are explained.

To illustrate the procedure, an example of the observations on Madras (Fort) Radio is given along with the necessary calculations.

From the daily observed values and weekly averages of the field intensity of Madras (Fort) Radio VWM working at 75 kc. per second, and from an analysis of the existing conditions the probability that the observed high attenuation may be due to the interference of the direct and the indirect rays is suspected. Further work designed to explain observed phenomena is also outlined.

PART I.

1. INTRODUCTION.

The measurement of the intensity of received radio signals has become indispensable for two important reasons. First, we have the great problem of determining the laws of propagation of electromagnetic waves round the surface of the earth; secondly, there is the purely commercial aspect of the question, namely, installing just that amount of plant at the transmitting station which will ensure perfect radio communication with the distant receiving station under the most adverse circumstances. At present, with the existing stations, the electric intensity of the received signals at the receiving station lies anywhere between 10μv/m. and 100μv/m. when the distance is large and between 100μv/m. and 1·0 mv/m. at shorter distances. At the Bureau of Standards, Washington, L. W. Austin has measured the field strength of Cavite (NPO) to be 2μv/m.

Early methods of obtaining the field strength directly by inserting the measuring instrument, usually a Duddell thermo-galvanometer,

in the aerial circuit have been discarded by most experimenters, except for measuring the effective height of aerials ; they have been replaced by the substitution method, first proposed and used by W. H. Eccles, using vacuum tube amplifiers.

In India, some work on field-strength measurement has been conducted by the Marconi Wireless Telegraph Co. and by P. J. Edmunds (*Electrician*, 1923, **91**, 164), at Karachi for the Government of India. The measuring apparatus in the Radio Laboratory of the Indian Institute of Science, Bangalore, has been installed to measure the field strengths of the long wave radio stations.

The first measurements have been made on the station nearest to and strongest at Bangalore, viz., Madras (Fort) Radio, working at 75 kc. per second with a current normally of about 50 amperes at the base of its aerial, 260 ft. in height. Other long wave stations will be taken up subsequently.

2. CHOICE OF APPARATUS.

The method developed and adopted at the National Physical Laboratory by J. Hollingworth (*J. Inst. Elec. Eng.*, 1923, **61**, 501) was selected as the most suitable for the work in hand for the following reasons :—

(*a*) Comparative simplicity of apparatus and cheapness of construction ;

(*b*) Ease and quickness of operation without any sacrifice of accuracy in the results ;

(*c*) Large frequency range and absence of any necessity for elaborate and systematic shielding ;

(*d*) Measurement being made on the basis of galvanometer deflections and not of the sound in a pair of telephones, the method is objective and therefore free from the comparative insensitivity of the telephone as well as from personal equation which is associated with it.

3. PRINCIPLE OF THE METHOD.

The radiation from the station under observation induces an electro-motive force in a properly orientated tuned coil aerial, the constants of which are known. The coil electromotive force is amplified by a 3 or 4-stage resistance-capacity coupled amplifier using capacity reaction between the first and second triodes to control the effective resistance of the receiving set. The amplified signal produces a deflection in a sensitive galvanometer inserted in the anode circuit of the last triode (Fig. 1).

The voltage producing the deflection is known from the calibration of the amplifier, effected by a local oscillator which incorporates a calibrated mutual inductance. The field strength is calculated from the effective resistance of the receiving arrangement and the constants of the frame coil.

The existing arrangement is not suited for measurements with routine transmission on account of the long period of the galvanometer. Accurate measurement is possible only with stations which transmit an experimental programme. A long dash of at least one minute duration, with the current in the aerial kept steady at a known value throughout the period, is the form of the test signal adopted.

If an Einthoven string galvanometer is used in place of the pointer instrument, it is possible to obtain an almost continuous record of the variation in field intensity throughout the day without any disturbance to the ordinary routine of the transmitting station.

PART II.

1. AERIAL.

The apparatus in daily use at the Laboratory closely follows the description given by Hollingworth of the design made by him for the National Physical Laboratory.

While the method does not preclude the use of an open aerial, preference is given to the frame aerial for two reasons; first, its directional property is a distinct advantage and secondly, the physical constants of this type of aerial are obtained more readily than those of an open aerial.

On the other hand the closed type has two interdependent disadvantages :—

(*a*) For a given field strength F, the electromotive force induced in a coil aerial (see Appendix) is $\frac{2\pi anF}{\lambda}$, whereas it is Fh for an open aerial of height h. As λ increases, the electromotive force induced in the frame aerial correspondingly decreases, everything else remaining unaltered.

(*b*) As a result of this, the number of stages of amplification with a coil aerial is necessarily larger. Any increase in the number of stages tends to make the amplifier and thereby the whole apparatus less easy to manipulate.

The coil used throughout the experiments consists of No. 18 S.W.G. hard-drawn bare copper wire wound, with $\frac{1}{4}$ inch spacing, round a frame, so that the sides along the wire measure five feet each. It is divided into three sections of 10, 20 and 50 turns and provided with a three-way two-pole selector switch. The switching arrangements, with the tuning condenser and the adjustable series resistance are shown in Fig. 2. The aerial, in which the selector switch, the aluminium pointer and the degree dial can be seen, is shown in Fig. 3.

2. AMPLIFIER CIRCUITS.

The amplifier (Fig. 4) consists of a resistance-capacity coupled arrangement of the usual type. It is mounted on a vertical board for accessibility, thus :—

(*a*) Minimising inter-triode capacity, which in cramped spaces may prove disturbing and troublesome;

(*b*) Suiting detailed experiments on resistance-capacity coupled amplifier circuits;

(*c*) Making it easy to introduce any necessary modifications;

(*d*) Making possible individual control of each stage in the amplifier. The obvious objection is that it is exposed to damp, dust and changes in temperature.

The high tension supply for the anodes consists of a battery of small 1·5 ampere-hour accumulators which have proved to be very steady and reliable.

The anode voltage used is 170, and may appear rather high; but with 10^5 ohms anode resistance, the voltage actually impressed on the triode is only about forty or fifty volts. Experiments have shown that reducing the battery voltage below about 150 makes the amplifier less efficient, while an increase to about 250 or 300 causes a distinct improvement in its working. For ordinary reception and 'listening in', a low filament current and a smaller anode voltage with a high anode resistance are possible and even advantageous in many respects (*W. W. and Rad. Rev.*, 1925, **17**, 395; also, *Jahr. Dr. Tel.*, 1925, **26**, 52).

The well-known Mullard carbonised cotton cellulose anode resistances and grid leaks (*Exp. Wireless and W. Eng.*, 1924, **1**, 328) are used. It has been found that they are reasonably steady though a gradual change appears inevitable. Wire-wound resistances will be tried later to ascertain whether perfect steadiness both with time and wavelength can be secured.

A grid potentiometer is used at the first triode; it consists of a 500-ohm rheostat across a small 8-volt battery. This is very valuable for controlling the amplifier and preventing self-oscillation.

A reaction condenser, between the anode of the second triode and the grid of the first, provides another means of controlling the amplifier. Its maximum value is about $20\mu\mu f$ and the minimum is very low. A slightly different arrangement, first used by the French Navy, may be noted (*L'Onde Electrique*, 1922, **1**, 101).

The presence of this condenser has a profound effect on the apparent input-impedance of the amplifier and therefore on the behaviour of the apparatus.

The connections of the last triode, which acts as a detector, are shown in Fig. 5. It may be used as a measuring triode after suitable calibration.

A few of the more important points to which attention is drawn are shown in the figure. As usual, the galvanometer and the other indicating arrangements are all on the negative side of the high tension battery. A separate six-volt 60 ampere-hour battery is required to maintain the filament current steady. An 'iron-in-hydrogen' resistance made by the General Electric Co., is inserted in the filament circuit to maintain the current constant, for all likely variations in the filament battery voltage. Fig. 5 (*b*) shows that for a change of voltage from 1·8 to 3·75, the greatest change in the current is only 0·015 ampere or about 3 per cent. of the mean value, i.e., 0·525 ampere.

The normal anode current of the triode, preferably a dull emitter, is balanced by a 2-volt accumulator with the potentiometer arrangement as shown in Fig. 5. The galvanometer used is a 0–30μA range (120 divisions) semi-suspended pointer instrument. It was found after a good number of trials, that to secure stability and reliability in working, it was absolutely essential that resistances used for the balancing potentiometer arrangement, the filament circuit and in fact everywhere, should be of the stud-contact type. Otherwise, the inevitably varying nature of the contact causes creep of the zero.

The 6μf condenser across the galvanometers is intended to take up transient changes in the anode current, whether due to atmospherics or other causes. When the effective resistance of the receiver is low and the galvanometer reading high, this condenser is not very effective, sudden large deflections indicating the presence of atmospheric disturbances.

By means of a double-pole throw-over switch, telephones are thrown into the circuit. It was found expedient to use two galvanometers; the coarser with a shorter pointer and a correspondingly small scale (a Weston Model 375 galvanometer) is used for the preliminary adjustments. During the preliminary Morse signal, the set is tuned to the incoming wavelength as accurately as possible, after which the more sensitive instrument is thrown into the circuit and final adjustments are carried out before the 'long' is made by the transmitting station.

3. CALIBRATING CIRCUITS.

The calibrated oscillator fitted for the calibration of the amplifier, consists of the usual arrangement shown in Fig. 6. The main oscillating inductance is a long single layer coil wound on a 5¾ inch paxolin tube with the secondary mounted a short distance from it. High frequency current in the primary is measured by a vacuo thermo-junction (Cambridge Instrument Co., 15 mA., 47·9 ohm heater)

and a suitable galvanometer; for this purpose a Gambrell micro-ammeter has proved very satisfactory.

The secondary consists of several separate sections having 2, 4 or 8 turns and corresponding values of mutual inductance; any one of these sections may be used by means of a selector switch. The values of the mutual inductance are 0·79μH, 2·136μH and 5·192μH. These secondary coils give the voltage applied to the amplifier. Fine variation is obtained by adjusting the anode voltage by means of a potentiometer connected across the anode accumulator battery. The change in the oscillator wavelength due to a change in the anode potential from 23 to 90 volts was found to lie between 100 and 120 metres and this might be expected to cause inaccuracies. This has been pointed out by Hollingworth to be of no great consequence; and in order to find whether this was so or not the following test was made:—

The amplifier was calibrated with a certain value of M but with no correction applied for the change in the oscillator wavelength caused by the alteration of the anode voltage from 23 to 90 volts. The deflections of the galvanometer at the output end of the amplifier and the corresponding primary current obtained by a thermo-junction and galvanometer were noted and graphed. Next, at each change of anode voltage, the wavelength of the oscillator was adjusted to the correct value by the tuning condenser with the help of a heterodyne wavemeter. The wavemeter was then shut off, the primary current and the galvanometer deflection being again noted and graphed. The maximum difference between the two cases never exceeded 8 to 10 per cent.

It might be thought necessary that the oscillator frequency should differ slightly from the incoming signal frequency in order to avoid 'pick up' by the calibrating inductance. This 'pick up' is quite small and may be avoided by proper orientation of the coil. It has been possible on a few occasions to check this when, just before the transmission of the test signal, there was no radiation from the Madras Station. During this interval the amplifier was calibrated by noting the primary current and the corresponding deflection on the galvanometer. Afterwards when the station was working on its routine, the main coil was orientated so as to have the maximum induced electromotive force due to the incoming field. A calibration curve was again obtained and no difference could be seen between the two sets of readings. With a powerful field, however, it is advisable to take every precaution to avoid direct 'pick up'.

Determination of the Mutual Inductance M.—This does not present any difficulty. The arrangement used for determining its value under normal working conditions is shown in Fig. 6. The current in

the primary is measured by a good thermo-junction and micro-ammeter, variations being made by adjustment of anode voltage without any change in wavelength. The secondary circuit is connected to a Duddell thermo-galvanometer with a 101·7 ohm heater. A lower resistance heater was not found quite satisfactory for the values of M requiring measurement.

A current I_1 in the primary at a frequency f induces in the secondary an electromotive force $2\pi f MI_1$ where M is the mutual inductance to be determined. If the total resistance and reactance of the secondary circuit consisting of the secondary turns, the heater of the thermo-galvanometer and the connecting leads be R_2 and X_2, and the secondary current as shown by the deflection of the thermo-galvanometer be I_2, then $2\pi f MI_1 = I_2 (R_2^2 + X_2^2)^{\frac{1}{2}}$; i.e. $M = (I_2/I_1) (R_2^2 + X_2^2)^{\frac{1}{2}} (2\pi f)^{-1}$. In this particular apparatus, the resistance of the secondary winding and connections is negligible, as also is the reactance X_2, when compared with the resistance of the heater of the galvanometer. Similarly, variations in the resistance due to changes of frequency are swamped. Thus in the above equation $(R_2^2 + X_2^2)^{\frac{1}{2}} = R_G$, the resistance of the heater of the thermo-galvanometer:

$$\therefore M = (I_2/I_1) R_G/2\pi f = R_G I_2/\omega I_1$$

In order that I_2 may be sufficient to give a reasonable deflection, it is necessary to increase I_1 by using a higher anode voltage, particularly when measuring very small values of M. From 50 to 200 volts was found sufficient for this purpose. When calibrating the thermo-galvanometer with continuous current, it is necessary to note the deflections for the same value of current reversed and to take the mean of the two deflections. The same procedure is advisable when calibrating thermo-junctions.

By thus determining M under working conditions at the required frequency and by mounting the secondary at a short distance from the primary, any capacity coupling which may exist will be included in the value of M so determined. The uncomfortable suspicion that an indefinite amount of energy may be reaching the secondary through accidental capacity coupling need not arise. The control detailed above, both for rough and fine variations in the secondary voltage, is more than sufficient for the measurements.

That M does not remain the same for all frequencies is shown in Fig. 7 and only emphasises this point. When working on different stations, it is necessary that the appropriate value of M, read from the curve should be used for calculations.

The mutual inductance method of getting small known radio frequency voltages has been successfully used in field strength

measurements by Vallauri (*Proc. Inst. Rad. Eng.*, 1920, 8, 286), Moullin, Hollingworth (*J. Inst. Elec. Eng.*, 1922, **61**, 67 and 501) and others.

To avoid some of its disadvantages, such as the variation of primary current and frequency through changes in anode voltage and the changes in M with wavelength, it has been decided to adopt the current transformer method in place of the present mutual inductance method. A large voltage range over a reasonably wide band of frequency will be secured without changes in anode-voltage, oscillating current and frequency; and, except for the low values of voltage, the percentage accuracy is the same throughout (*Jahr. Dr. Tel.*, 1923, **22**, 56; *J. Inst. Elec. Eng.*, 1925, **63**, 597 and 1926, **64**, 253; *Elek. Nach. Tech.*, 1925, 2, 416).

The alternative method employing a resistance potentiometer arrangement is also free from the disadvantages of the mutual inductance method and further is capable of measuring potential differences of the order of micro-volts (*Phys. Rev.*, 1925, **26**, 118). The Western Electric Co. has developed this method and used it successfully. Everything considered, the current transformer method within certain limitations is perhaps the cheapest and the easiest to construct.

4. EFFECTIVE RESISTANCE OF THE RECEIVING CIRCUIT.

The above method of obtaining the necessary locally generated voltage makes the determination of the effective resistance of the receiving circuit essential for every reading. The variation in the resistance is partly intentional and partly due to ageing of the triodes, etc., and dust on leaks. The intentional variations arise from the bias given to the grid of the first triode of the amplifier and the setting of the control condenser, apart from any changes that may be made in the filament-current, anode-voltage and number of stages of amplification.

The amplifier input-impedance acts as a load on the oscillating circuit and absorbs a fraction of the power induced in the aerial by the incoming signal and has to be considered in the working of the apparatus. This has been discussed by Miller (*Bur. Stand., Sc. P.*, No. 351, 1919), Weinberger (*Proc. Inst. Rad. Eng.*, 1920, 8, 334), Thomas (*J. Inst. Elec. Eng.*, 1926, **64**, 253) and others. If L, R and C denote the constants of the oscillating circuit, the effect of the input-impedance of the amplifier may be represented by a resistance R_1 and a series capacity C_1 in parallel with the tuning capacity C. A very slight alteration in C_1 modifies the effective resistance of the receiving apparatus.

In the formula $F = \frac{i_0 M R \lambda}{2\pi a n L}$, it is not the wire resistance of the coil aerial, but the total effective resistance of the whole receiving arrangement, at the working frequency which is used for R, consisting of the resistance of the oscillating circuit and the amplifier across it, being modified by the grid bias on the first triode and the setting of the control condenser.

Measurement of Effective Resistance.—The resistance variation method of measuring the effective resistance of the receiving circuit was adopted on account of its simplicity.

A five-stud switch introduces into the oscillating circuit, consisting of the coil aerial and tuning condenser, a series resistance of 0·58, 1·0, 1·41 or 2·71 ohms. The test signal or the local uncalibrated oscillator shown in Fig. 1 may be used as the source of radiation for this measurement. If the latter is employed, its wavelength is adjusted to that of the test signal. Experience has shown that it is better to use the distant station itself for this purpose; by so doing the signal may be watched and at the same time the observations for measuring the resistance are made under working conditions during the time the signal lasts. The only assumption involved is that during the interval of one or two minutes there will be no changes of signal intensity.

In practice, with zero added resistance, the control condenser and grid bias are adjusted to give almost full scale deflection; and then, the deflections are taken for different values of added resistance.

The voltages corresponding to these deflections are found on calibrating the amplifier by the local calibrated oscillator. From these voltages and the known values of the added series resistances, the effective resistance of the receiving circuit is calculated as follows :—

Let R_0 be the effective resistance to be measured; and R_1, R_2, R_3 and R_4 be the added series resistances. Let i_0, i_1, i_2, i_3, and i_4 be the corresponding currents in the primary of the calibrated mutual inductance. Since the gradient F, whether due to the distant station or to the local uncalibrated oscillator, remains constant throughout, it follows from the formula $F = \frac{i_0 M R \lambda}{2\pi a n L}$ that $i \times R$ is constant; i.e.,

$$i_0 R_0 = i_1 (R_0 + R_1) = i_2 (R_0 + R_2) = i_3 (R_0 + R_3) = i_4 (R_0 + R_4).$$

Any two of these five equations give a value for R_0; and the mean of the ten possible values is the required effective resistance.

In actual practice, it is sufficient to use only two or three positions of the switch, particularly when the duration of the signal is

short. An example of these measurements is as follows :—3·90, 3·64, 3·58, 3·40, 3·79, the mean value being 3·66 ohms.

The percentage accuracy as seen by the above series, which is normal, is not very high; but improvement to any appreciable extent does not seem to be easy. H. A. Thomas, in his experiments on amplifiers, rejects this method and employs the resonance curve obtained by noting the deflections of the galvanometer at the output end of the amplifier, due to changes in the capacity of the calibrated tuning condenser of the local oscillation generator. He claims higher accuracy and great consistency. For work on signal strength measurement, the resonance method has the drawback of being cumbersome and rather difficult. The degree of accuracy attainable with the resistance variation method appears sufficient.

The above series of resistance values was obtained with a grid bias of zero at the first triode and the control condenser scale set at 153°. With grid bias unaltered and the control condenser at 120°, the effective resistance of the receiving circuit was found to be 8·56 ohms. The continuous current resistance of the coil is 3·95 ohms and the resistance at the working frequency of 75 kc. per second is 114 ohms. These figures show the profound influence of the control condenser setting.

The effect of the strength of the signal on the resistance of the amplifier has been dealt with by Hollingworth and need not be considered here.

5. PROCEDURE IN WORKING.

(*a*) *Preliminary Arrangements.*—In getting the apparatus to work on any station, it is of the greatest importance to guard against any tendency of the amplifier to oscillate. Stability in working should be secured, if necessary, at the cost of a reduction in the amplification factor.

A point of some importance is the difference in the behaviour of the amplifier with galvanometer or with telephones at its output end (Fig. 5). Using only two or three triodes, the set works stably with galvanometer or telephones. A heterodyne is necessary for audible signals, but with four or more triodes a heterodyne is unnecessary; the signals are heard clearly because the amplifier oscillates. If the galvanometer is now switched on, it may be found that there is no oscillation at all and the set is quite stable. This difference is sometimes observed even with three stages. That the set oscillates on telephones is no proof that it still oscillates when on the galvanometer. It behaves entirely differently with the galvanometer. It may be

said that the set is usually more stable with the galvanometer than with telephones.

Test for Oscillation.—The first important step in getting the apparatus ready is to test for oscillation.

Everything is connected for receiving the incoming signal except the 170 volts anode supply to the amplifier. The high tension of 40 volts for the last triode is connected and the filament currents are adjusted to their working values. The galvanometer in the anode circuit of the last stage, which functions as a detector of the cumulative grid-rectification type, is then balanced by the potentiometer arrangement shown in Fig. 4. The 170 volt battery is then switched on. If the galvanometer needle does not move, or moves slightly owing to the extra load on the high tension battery, the set is not oscillating. If, on the other hand, the galvanometer needle flies over, the set is oscillating.

Prevention of Oscillation.—If the set is oscillating and the galvanometer needle flies over, the control condenser capacity should be reduced until oscillations cease. If oscillations persist even when this condenser is disconnected, the application of a very slight positive bias to the grid of the first triode, by means of the grid potentiometer (Fig. 4), effectively stops any tendency to oscillate. The positive bias thus applied should be as small as possible. This is more convenient than slight alterations in the 170 volt anode supply.

In trying for a new station the following procedure may be adopted. By means of a wavemeter the frequency of the local uncalibrated oscillator is set to that of the station. Using only three triodes in the amplifier and disconnecting the control condenser, any tendency to oscillate is prevented in the manner explained above.

If now the local uncalibrated oscillator is placed close to the coil aerial, it becomes the source of a powerful and easily found signal which induces a large electromotive force in the coil. This, tuned by the condenser across the coil, causes a deflection in the galvanometer. The oscillator is now placed at such a distance from the coil as to give almost a full scale deflection. At this stage, the resistance of the receiving set, measured in the manner described previously, is comparatively high; consequently the tuning is flat, and requires relatively large variations in the value of the tuning condenser to produce a given change in the galvanometer deflection. In this connection, it is important to emphasise the need for, and the extreme usefulness of, a vernier condenser, the capacity of which may vary from 100 to several thousand micro-microfarads depending upon the working frequency.

Even at this stage, there is a pure resonance curve with well-marked zeros on both sides of the resonance or peak value (Fig. 8*a*.)

The control condenser is then connected up and kept at about its minimum value. This slightly detunes the receiver and causes a reduction in the galvanometer deflection. By adjusting (usually increasing) the vernier condenser, tuning is restored; the galvanometer shows a larger deflection than before, proving that the resistance of the receiving set has decreased.

The value of the control condenser is increased a little more and the set retuned with the vernier condenser. This gives a still larger galvanometer deflection due to a further decrease in resistance. If the needle goes off the scale, the source is moved away from the coil.

This process of gradually reducing the resistance of the set, making it more sensitive by increasing the value of the control condenser, and retuning at each step is continued until oscillation sets in. This can be stopped immediately by reducing the value of the control condenser.

The set is now ready to receive the distant station. In fact, when the local source is adjusted accurately to the signal frequency it will be found that in the process of making the apparatus sensitive, apart from the deflection due to the local source, the galvanometer shows the incoming signal as well, provided the coil aerial is properly orientated.

Otherwise, the frequency is adjusted as close as possible by the local source thus inducing a powerful signal. The oscillator is then shut off and the set made more sensitive as detailed above. A search is made in the neighbourhood for the incoming signal by proper variations of the vernier condenser. After a few trials in making the set more or less sensitive as circumstances require, the galvanometer shows the signal of the routine transmission.

If the signal is very weak, the effective resistance of the set should be made very low when working with three triodes; or better, four triodes may be used and extreme sensitiveness avoided.

The notable feature in the above process of increasing the sensitivity of the apparatus is the large decrease in resistance caused by a small increase in the value of the control condenser. For this reason, the condenser consists of only two or three plates, having a maximum value of between 20 and 50 micro-microfarads, with a fine control and good insulation. The condenser is also provided with a long

handle to prevent the large variations in the galvanometer deflection which would otherwise occur on the approach of the hand for adjustment.

When the set is on the point of oscillating, the effective resistance of the receiving set is extremely low and can be adjusted to a small fraction of an ohm. In this condition the apparatus is very unstable and violent oscillations are produced on approaching the amplifier, or, as observed by Hollingworth, by merely touching the telephones separated though they be by a porcelain mounted double-pole throw-over switch and a telephone transformer. It is therefore more convenient to work with the resistance of the set at not less than one ohm.

Under these conditions, the tuning is extremely sharp, as shown by the steepness of the resonance curve in Fig. 8*b*, with the resistance of the receiving set at 3·66 ohms. The abscissae refer to a 100-micro-microfarads condenser with 180 scale divisions. This condenser is in parallel with a variable air condenser of 2,000 micro-microfarads.

A resonance curve of this nature is a satisfactory proof that all is well with the apparatus.

Sharpness of tuning is the only way, perhaps of securing selectivity with this apparatus. This is the reason why it is not of much consequence if the incoming signal is not of the scheduled frequency; on the other hand, it is of the utmost importance that the station should keep its wavelength extremely steady.

Referring to curve (*b*), Fig. 8, it is seen that the tuning is very sharp. A change in wave-length of 10 metres corresponding to about 2·5 per cent. change of the total value of the tuning condenser causes the galvanometer deflection to decrease by 60 per cent. of the value when accurately tuned.

When the effective resistance is higher, as in Fig. 8*a*, tuning is less sharp. The same change in wave-length brings about a reduction of 18 per cent. in the deflection of the galvanometer and the curve is comparatively flat.

On account of the extremely sharp tuning when the apparatus is very sensitive, it is necessary to vary the vernier condenser slowly; otherwise, it is quite possible to run through even comparatively strong signals without noticing them on the galvanometer because of the long period of its needle. With an Einthoven string instrument, having a period of 0·01 second, there is no chance of missing the signal, the string responding accurately to the highest speed transmission.

Baumler at the Telegraphentechnische Reichsamt, Berlin, uses a single string electrometer in his investigations (*Proc. Inst. Rad. Eng.*, 1925, 12, 5).

(*b*) *Final Adjustments and Observations.*—The preliminary arrangements and testing of the apparatus are preferably completed between 15 to 30 minutes before the test signal comes in, so that the apparatus will have time to settle down to a steady condition. Observations can be satisfactory only when the measuring set is free from any erratic, though small variations.

As soon as the test signal comes in, the vernier condenser is varied slightly until accurate tuning is secured as given by the maximum deflection on the galvanometer with well marked zeros on either side. The deflection, as remarked earlier, should be about 85 per cent. of the full scale.

Next, by means of the series resistance switch, the galvanometer deflection for each of its positions is taken. The switch is brought back to its first stud corresponding to zero added resistance. Thereafter, the signal is closely watched for any variations. The needle generally remains steady at its maximum reading, unless the field strength alters suddenly in the small interval of time during which the signal lasts. Such an instance of variation shown in Fig. 10*a* on 6th March or on 6th May is not very frequent.

Immediately the signal stops and the needle returns to zero, the amplifier is switched on to the calibrated local oscillator, the wavelength of which has been adjusted to that of the signal. The deflections of the galvanometer and the current in the primary of the calibrated mutual inductance are noted for varying anode voltages, the range of voltages being such as to give deflections on the galvanometer a little above the maximum and a little below the minimum of the deflections obtained with the test signal. This gives the calibration curve of the amplifier (see Fig. 9). On this curve are read off the primary currents (i.e., the secondary voltages) corresponding to the deflection obtained for each position of the series resistance switch. The effective resistance of the receiving circuit is calculated as described in Section 4.

From the resistances so obtained, the value of M used, the primary current and the constants of the coil, the field strength is calculated from the equation $F = \frac{i_0 M R \lambda}{2\pi a n L}$, the various quantities being expressed in proper units.

6. EXAMPLE AND OBSERVATIONS.

As an example of the procedure explained in Section 5*b*, the following readings and calculations of March 23, 1926, are given :—

1. Deflection of galvanometer with zero added res. = 95·25 divisions.

2. Deflection of galvanometer with 1·41 ohms added res. = 72·2 divisions.

3. Deflection of galvanometer with 2·71 ohms added res. = 58·8 divisions.

Calibration of amplifier (with the local oscillator).

Current in primary of M.	ω M i. (secondary voltage)	Deflection of galvanometer
9·00 mA.	9·063 mV.	108·5 divisions.
8·00 ,,	8·056 ,,	83·5 ,,
7·00 ,,	7·049 ,,	67·5 ,,
6·00 ,,	6·042 ,,	50·5 ,,
5·00 ,,	5·035 ,,	35·5 ,,
4·12 ,,	4·15 ,,	23·5 ,,
2·80 ,,	2·82 ,,	14·0 ,,

These readings are graphed in Fig. 9. From this curve, the currents corresponding to 95·25 divisions, 72·2 divisions and 58·8 divisions are 8·52 mA, 7·32 mA and 6·52 mA respectively.

Taking (1) and (2), the effective resistance $R_o = \frac{7{\cdot}32 \times 1{\cdot}41}{8{\cdot}52 - 7{\cdot}32}$ = 8·60 ohms.

Taking (1) and (3), the effective resistance $R_o = \frac{6{\cdot}52 \times 2{\cdot}71}{8{\cdot}52 - 6{\cdot}52}$ = 8·84 ohms.

Taking (2) and (3), the effective resistance

$$R_o = \frac{6{\cdot}52 \times 2{\cdot}71 - 7{\cdot}32 \times 1{\cdot}41}{7{\cdot}32 - 6{\cdot}52} = 9{\cdot}19 \text{ ohms.}$$

Mean of these three values = 8·88 ohms.

In the formula $F = \frac{i_o M R \lambda}{2\pi a n L}$,

i_o = Current (r.m.s.) in the primary of the calibrated M corresponding to zero added resistance = 8·52 mA.

M = Value of mutual inductance = 2·136 μH.

R = Effective resistance of receiving circuit = 8·88 ohms.

λ = Wavelength of the signal = 4000 metres. (75 kc. per second).

a = Area of coil aerial = 5 ft. × 5 ft., or 23,226 sq. cms.

n = Number of turns in the aerial = 20.

L = Effective inductance of the coil at 75 kc. per second = 2·8 millihenries at 4000 metres.

Substituting these values in the equation, we get

$$F = \frac{(8{\cdot}52 \times 10^{-3}) \times (2{\cdot}136 \times 10^{-6}) \times 8{\cdot}88 \times (4000 \times 10^{2})}{2\pi \times 23{,}226 \times 20 \times (2{\cdot}8 \times 10^{-3})}$$

= 791·2/micro-volts per metre.

The aerial current on this day was 60 amperes giving a field strength of 13·2 μv/m per ampere in the aerial.

7. DISCUSSION OF RESULTS.

Curve (*a*) of Fig. 10 gives, in micro-volts per metre, the daily values of the potential gradient per ampere in the transmitting aerial at Madras Radio. In spite of the short distance between Madras and Bangalore (295 Km.), the variations from day to day are very large. On three days, there have been abnormally high values, about 14μv/m per ampere. The lowest is 4·8μv/m per ampere on March 16. Apart from these extreme values, a large percentage of the readings lie between 8·5 and 10μv/m per ampere.

Curve (*b*) of Fig. 10 is the average of the readings for each week. Points on this curve lie most closely about the line 9·4μv/m. per ampere. There are only three points which lie far out from this, viz., 11μv/m. for week ending with March 27 and 7·9μv/m. for weeks ending with April 10 and May 15.

In Appendix I is given the calculated value of the potential gradient on the basis of one ampere in the transmitting aerial, using the formula $F = \frac{120\pi Ih}{\lambda d}$. In this the effective height of the aerial is taken to be 0·5 of its geometrical height. This very conservative figure has been assumed in the absence of other data. According to this assumption, the gradient works to 12·85μv/m. The Austin-Cohen and the Fuller coefficients for the present case are about the same, viz., 0·81. Applying this factor, we get 10·6μv/m. per ampere.

Compared with the observed figures, even this is a little too high. Curve (*c*) of Fig. 10 gives the ratio of the observed value to the

calculated value 12·84μv/m. This ratio is very close to 0·8, since the points crowd round this line.

The explanation of the low observed figure is not easy to see. The attenuation factors considered above are not strictly applicable to transmission completely over land. There are two sources of uncertainty, one in the aerial current, and the other in the possible distortion of wave form when the current in the transmitting aerial is increased from 50 amperes to 80 amperes.

A correct knowledge of the aerial current and of the effective height of the aerial will, it is hoped, lead to an explanation of the high attenuation observed. The transmission is completely over land between two places one on the sea coast and the other on a plateau over 3,000 feet in altitude without any intervening mountains.

Arrangements are being made to measure the effective height by the three aerial method, originated by Pession (*Rad. Rev.*, 1921, **2**, 228) and by the coil aerial method as a check (*Rad. Rev.*, 1921, **2**, 77 and *J. Inst. Elec. Eng.*, 1925, **63**, 936).

It is possible that the laboratory is so situated that the direct ray and that partly reflected and partly refracted from above interfere. This is worth considering, in view of the very short distance of transmission and the improbability of the effective height being only half the geometrical height. If the effective height is 0·7 times the actual height, the gradient works out to 16·3μv/m; and the ratio of the mean observed value to 16·3μv/m. is about 0·63. This figure favours the suspicion regarding the interference hypothesis. This can be confirmed only by continuous and systematic observations, both at the Institute and a few other carefully chosen places. At present, however, it is too early to arrive at any definite conclusions on data based on only twenty weeks' work.

The incorporation of an Einthoven galvanometer enabling observations to be made at all hours of the day will doubtless help in explaining to some extent the observed value in relation to the calculated figure.

I gratefully acknowledge the assistance given by the Wireless Authorities of the Government of India in transmitting test signals every day at 0756 I. S. T. To Professor J. K. Catterson-Smith, under whose direction this rather difficult experiment has been carried out, my warm thanks are due.

Besides the fact that the apparatus and the experiment closely follow the description given by Mr. Hollingworth, I am grateful to

him for many valuable suggestions readily given as the result of his own experience. These have considerably lightened my work and assisted me in reaching the measurement stage earlier than would have been possible without his help. Many points omitted here are well covered in his original paper.

My best thanks are due to Mr. V. Krishna Moorthy for the valuable help rendered in the later stages of the experiment.

Department of Electrical Technology,
Indian Institute of Science,
Bangalore.

[Accepted, 14-7-26.]

APPENDIX I.

1. CALCULATION OF THE THEORETICAL VALUE OF THE FIELD INTENSITY OF MADRAS RADIO (VWM).

The principal transmission formula used is the well-known one originally given by Hertz for a perfect plane conducting ground and a perfect dielectric for the medium of propagation. The formula is (*Bur. Stand., Sc. P.*, No. 354, 442).

$$F = \frac{120\pi I_s h_s}{\lambda d}$$

where

F = Electric intensity of the received signal.

I_s = Current in the transmitting aerial.

h_s = Effective height of the transmitting aerial.

λ = Wavelength.

d = Distance between the transmitting and receiving stations.

A factor $\sqrt{\frac{\theta}{\sin\theta}}$ by which the above equation should be multiplied takes into consideration the curvature of the earth.

In the present case the distance between Madras $\begin{matrix}(12^\circ 59' 17'' \text{ N}) \\ (80^\circ 10' 56'' \text{ E})\end{matrix}$ and Bangalore $\begin{matrix}(12^\circ 58' \text{ N}) \\ (77^\circ 38' \text{ E})\end{matrix}$ is so small that $1 - \frac{\theta}{\sin\theta}$ is negligible.

h_s = Effective height; this is taken to be 0·5 of the geometrical height in the absence of a figure determined by experiment.

$= 264 \times 0{\cdot}5$ ft. or 40·25 metres.

$\lambda = 4000$ metres.

$d = 183$ miles $= 295$ km.

Field strength per ampere $F = \frac{120 \times \pi(40{\cdot}25 \times 100) \times 10 \times 1}{(4000 \times 100) \times (295 \times 10^5)} \times 10^6 \mu v/\text{m}.$

$= 12{\cdot}85 \mu v$/metre per ampere neglecting attenuation.

The Austin-Cohen coefficient for this wavelength and distance works out to $\epsilon^{\frac{-0{\cdot}0015 \times 295/\sqrt{4}}{}} = \epsilon^{\frac{-0{\cdot}0015 \times 295/2}{}} = 0{\cdot}8019.$

After applying this correction factor for attenuation, the field strength per ampere works out to $12{\cdot}85 \times 0{\cdot}8019 = 10{\cdot}3 \mu v$/metre.

The corresponding Fuller coefficient is $e^{-0\cdot0045\times295/4^{1\cdot4}}$

$=e^{-1\cdot3275/6\cdot965}=\frac{1}{1\cdot21}=0\cdot826.$ Hence,

field strength per ampere $=12\cdot85\times0\cdot826\mu v/m=10\cdot61\mu v/m.$

There is not much difference between the two attenuation factors over this short distance.

APPENDIX II.

DERIVATION OF THE FORMULA $F=\frac{i_0MR\lambda}{2\pi anL}$

Let the coil Fig. 11 (*a*) be of vertical height h and length l and have n complete turns. Let the r. m. s. electric intensity of the incoming radiation be F; if the wave-front is not vertical but is inclined to the vertical as is generally the case, then F refers to the vertical component of the electric field.

The electromotive force induced in each wire on each side of the aerial is Fh, so that the total electromotive force on each side is nFh. The phase difference between the two electromotive forces is the phase angle between the values of the field at a distance l apart in the wave, Fig. 11 (*b*). Hence the relation $\frac{\theta}{2\pi}=\frac{l}{\lambda}$ (1)

If OA, OB be the two electromotive forces then OC the resultant has the value $V=nFh\times2\ (1-\cos\theta)^{\frac{1}{2}}$

$=2\ nFh\ \sin\theta/2$ (2)

θ being quite small, $V=nFh\theta$

Substituting for θ from Equation (1), we have for the resultant electromotive force driving the current round the coil $\frac{2\pi a\ nF}{\lambda}$ where $a=lh$, is the area of the coil.

When the coil is tuned to λ, the current flowing in the tuned circuit of resistance R is $\frac{2\pi anF}{\lambda R}$ (3)

The voltage across the tuning condenser i.e., resonance volts applied to the amplifier is $V_R=\frac{2\pi anF}{\lambda R}\ (R^2+\omega^2L^2)^{\frac{1}{2}}$ where L is the effective self-inductance of the coil. R^2 is negligible compared with ω^2L^2, so that $V_R=\frac{2\pi anLF\omega}{\lambda R}$ (4)

The local calibrated oscillator being adjusted to give the same deflection on the galvanometer as the radiation from the distant station, it follows that $\frac{2\pi anLF\omega}{\lambda R} = \omega i_0 M$ (5)

$$\therefore F = \frac{i_0 MR\lambda}{2\pi anL} \quad (6)$$

APPENDIX III.

Effective Inductance and Resistance of Coil.—In the formula $F = \frac{i_0 MR\lambda}{2\pi anL}$ for field strength, it is important to substitute the value of L at the working frequency; otherwise very erroneous results are bound to occur. At very long wavelegths, the value of the inductance is not far different from its value with continuous current; but with rise in frequency, the distributed capacity of the coil becomes increasingly important. The curve in Fig. 12 was obtained with the 30 turn section and shows that the effective inductance increases at first slowly with frequency and then much more rapidly. The steepness is very marked for wave-lengths below 3·5 km.

Whilst the resistance-capacity coupled amplifier used in the set works satisfactorily down to 2 km., the apparatus as a whole is difficult to manipulate below about 3·5 km. The effective inductance and high frequency resistance of the coil increase so rapidly that stable working becomes extremely difficult. The value of the tuning condenser becomes so small, that tiny variations in it cause large frequency changes.

Fig. 13 shows the change in the effective resistance of the same section with frequency. The steepness of this curve is greater at every point than that of the inductance curve. With a continuous current resistance of 3·95 ohms, that at 7 km. wavelength is 14·6 ohms, at 5 km., 31 ohms, and at 3·95 km., 120 ohms. Below 3 km. it was not possible to carry out measurements, because of the gradual approach to the natural wavelength of the coil.

It is therefore necessary to use a coil possessing large area-turns but only a small inductance. This means that for frequencies above 100 kc. per second a large coil with a small number of turns well spaced from each other should be used in preference to a smaller coil with a larger number of turns. Experience shows that the tuning capacity should not be less than 1,500 micro-microfarads to 2,000 micro-microfarads. For these two reasons, the 30 turns section could not be used for measurements on Madras Radio. Only 20 turns have been used, and the curves relating effective inductance and resistance with wavelength are not steep in the neighbourhood of 4 km.

BIBLIOGRAPHY.

1. EDMUNDS: Long distance radio reception in India, *Electrician*, 1923, **91**, 164.

2. HOLLINGWORTH: The measurement of the intensity of received radio signals, *J. Inst. Elec. Eng.*, 1923, **61**, 501.

3. KRONCKE: The resistance coupled amplifier, *W. W. and Rad. Rev.*, 1925, **17**, 395.

4. ARDENNE UND HEINERT: Über Widerstandsverstarker, *Jahr. Dr. Tel.*, 1925, **26**, 52.

5. The manufacture of high resistances for wireless receiving circuits, *Exp. Wireless* and *W. Eng.*, 1924, **1**, 328.

6. BRILLOUIN: The inherent reactive effects and stability conditions in resistance capacity amplifiers, *L'Onde Electrique*, 1922, **1**, 101.

7. VALLAURI: Measurement of the electromagnetic field of waves received during transoceanic radio transmission, *Proc. Inst. Rad. Eng.*, 1920, 8, 286.

8. MOULLIN: Observations of the field strength of Horsea wireless station, *J. Inst. Elec. Eng.*, 1923, **61**, 67.

9. MOLLER UND SCHRADER: Über der Herstellung kleiner Spannungen von bekannte Amplitude, *Jahr. Dr. Tel.*, 1923, **22**, 56.

10. DYE: Current transformer methods of producing small known voltages and currents at radio frequencies, *J. Inst. Elec. Eng.*, 1925, **63**, 597.

11. THOMAS: The performance of amplifiers, *J. Inst. Elec. Eng.*, 1926, **64**, 253.

12. ANDERS: Quantitative Empfangsmessungen in der Funkentelegraphie, *Elek. Nach. Tech.*, 1925, **2**, 416.

13. JENSEN: Potentiometer method for measuring micro-voltages at radio frequencies, *Phys. Rev.*, 1926, **26**, 118.

14. MILLER: Dependence of the input impedance of a three electrode vacuum tube upon the load in the plate circuit, *Bur. Stand., Sc. P.* No. 351, 1919.

15. WEINBERGER: Note on the input impedance of vacuum tubes at radio frequency, *Proc. Inst. Rad. Eng.*, 1920, **8**, 333.

16. BAUMLER: Recent investigations on the propagation of electromagnetic waves, *Proc. Inst. Rad. Eng.*, 1925, **13**, 5.

17. VALLAURI: Measurement of radiation of radio telegraphic aerials, *Rad. Rev.*, 1921, **2**, 77.

18. PESSION: Measurement of the effective height of aerials, *Rad. Rev.*, 1921, **2**, 228.

19. ROUND, ECKERSLEY, TREMMELLEN AND LUNNON: Report on measurements made on signal strength at great distances, *J. Inst. Elec. Eng.*, 1925, **63**, 933.

20. DELLINGER: Principles of radio transmission and reception with antenna and coil aerials, *Bur. Stand.*, *Sc. P.* No. 354, 442.

4644

Printed and published by George Kenneth at the Diocesan Press, East Bay, 455, Madras 1906. C13557

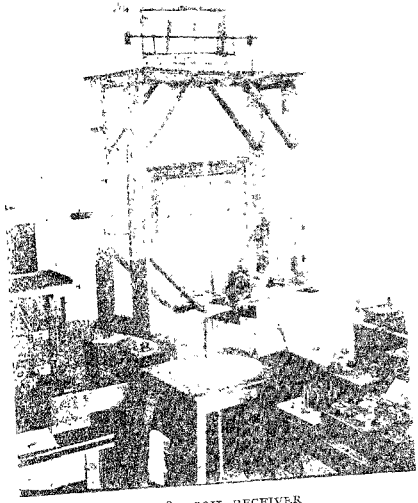

FIG. 3. COIL RECEIVER

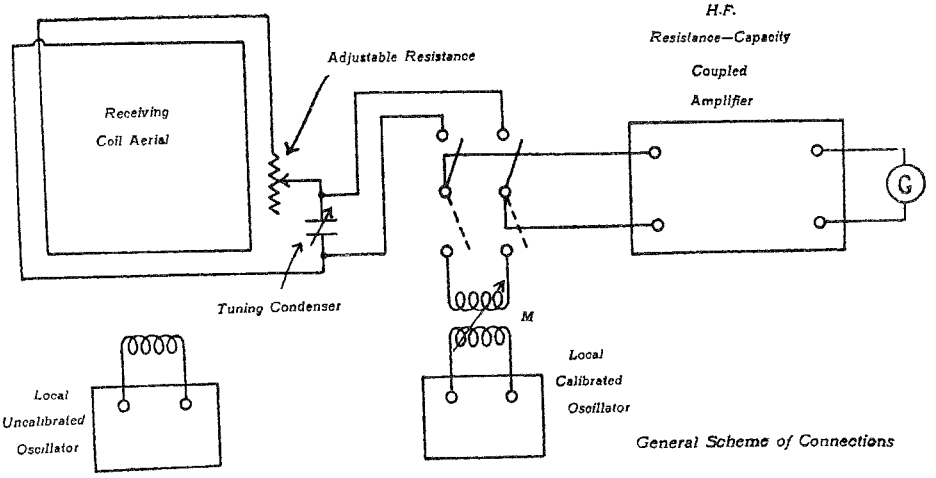
H.F.
Resistance—Capacity
Coupled
Amplifier
Adjustable Resistance
Receiving
Coil Aerial
G
Tuning Condenser
M
Local
Uncalibrated
Oscillator
Local
Calibrated
Oscillator
General Scheme of Connections

Fig. I.

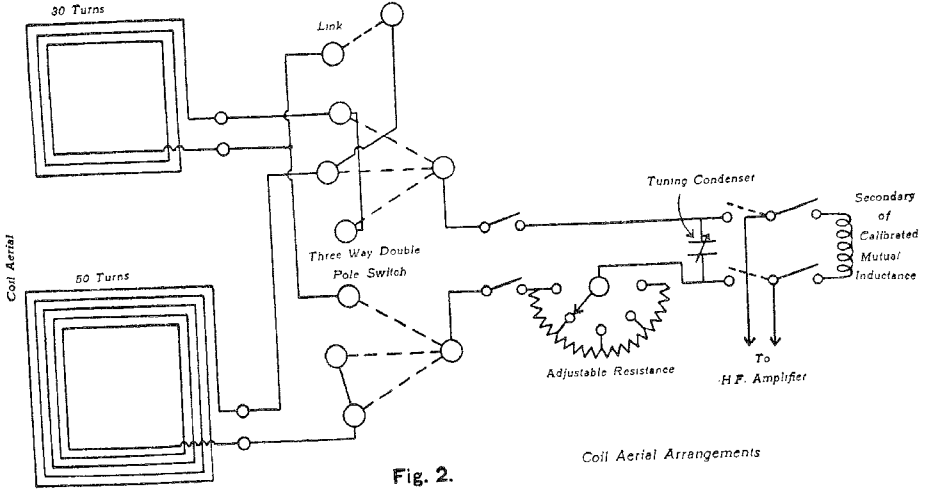

Coil Aerial Arrangements

Fig. 2.

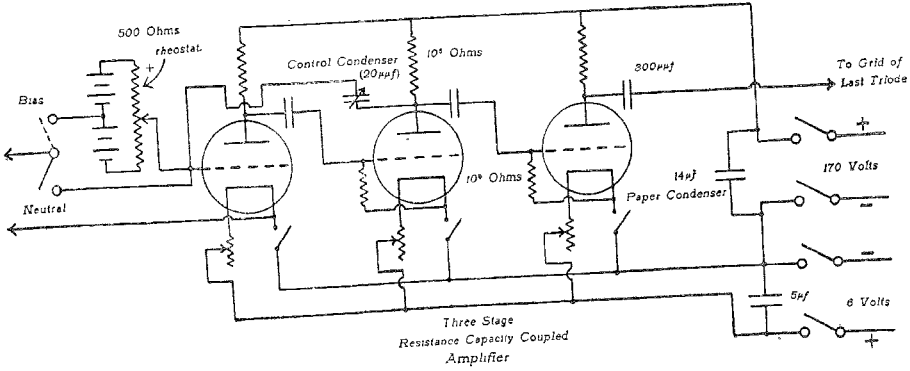
500 Ohms
rheostat
Bias
Neutral
Control Condenser
(20μμf)
10⁶ Ohms
10⁶ Ohms
800μμf
To Grid of
Last Triode
170 Volts
14μf
Paper Condenser
5μf
6 Volts
Three Stage
Resistance Capacity Coupled
Amplifier

Fig. 4.

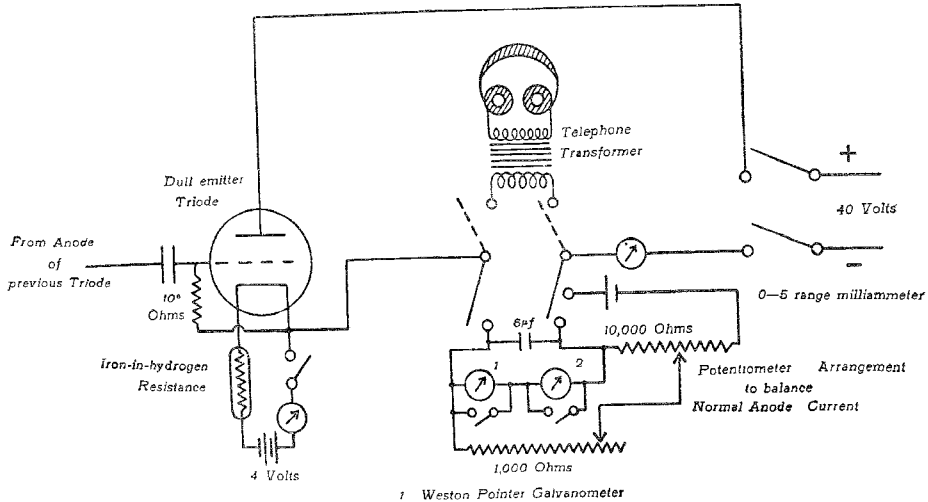

1 Weston Pointer Galvanometer

2 0—30μa range Semi-suspended Galvanometer
(Cambridge Instrument Co.)

Fig. 5 *(a)* Last Triode Circuits

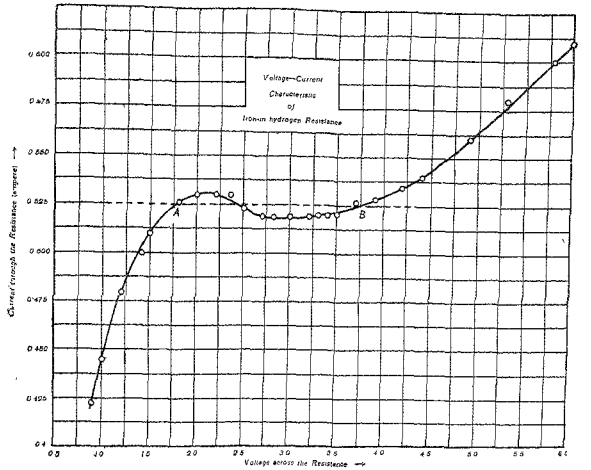
Voltage—Current
Characteristic
of
Iron-in hydrogen Resistance
A
B
Current through the Resistance (ampere) →
Voltage across the Resistance →

Fig. 5 (b)

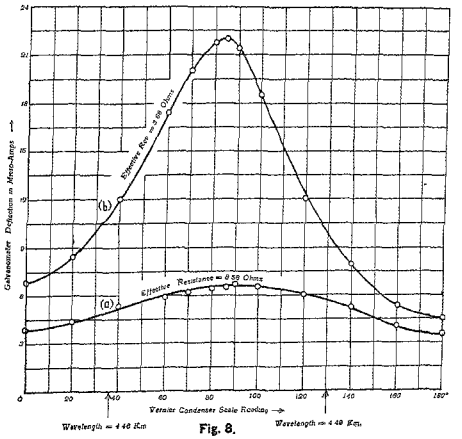
Effective Res = 8.58 Ohms
(b)
Effective Resistance = 8.58 Ohms
(a)
Galvanometer Deflection in Micro-Amps →
Vernier Condenser Scale Reading →
Wavelength = 4.46 Km
Wavelength = 4.49 Km

Fig. 8.

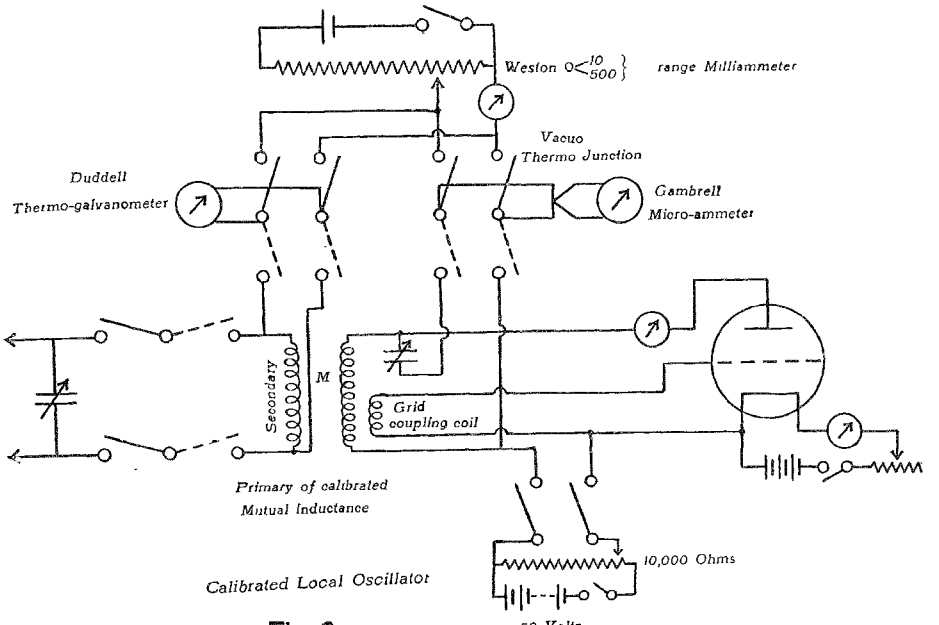
Weston 0 10 500 range Milliammeter
Vacuo
Thermo Junction
Duddell
Thermo-galvanometer
Gambrell
Micro-ammeter
Secondary
M
Grid
coupling coil
Primary of calibrated
Mutual Inductance
10,000 Ohms
Calibrated Local Oscillator
50 Volts

Fig. 6.

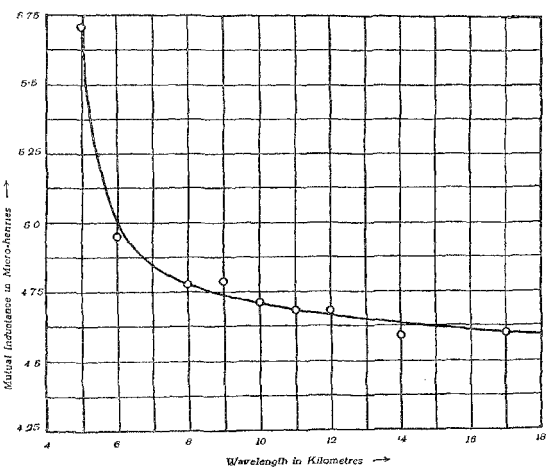
6·75
5·5
5·25
5·0
4·75
4·5
4·25
Mutual Inductance in Micro-Henries
4
6
8
10
12
14
16
18
Wavelength in Kilometres

Fig. 7.

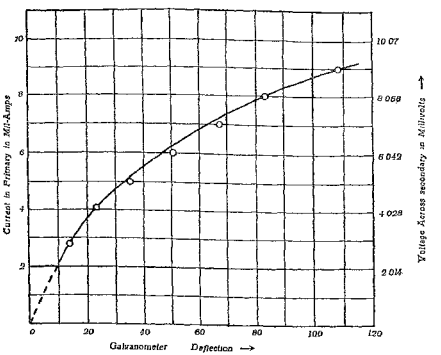
Current in Primary in Mil-Amps
Voltage Across secondary in Millivolts
10 07
8 058
6 043
4 028
2 014
0
20
40
60
80
100
120
Galvanometer Deflection

Fig. 9.

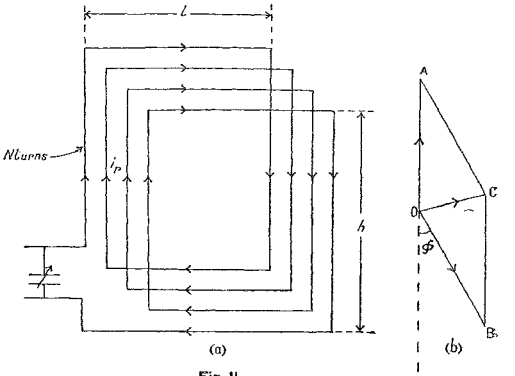
L
N turns
i_p
h
d
(a)
A
C
O
φ
B
(b)

Fig. 11.

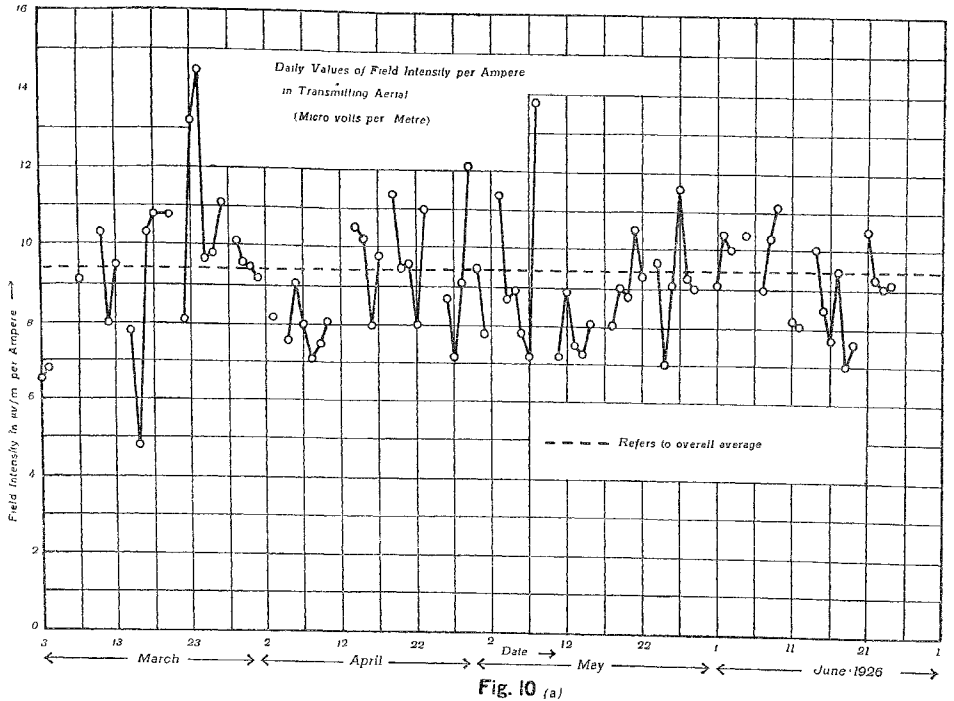
Daily Values of Field Intensity per Ampere
in Transmitting Aerial
(Micro volts per Metre)
Refers to overall average
Field intensity in μv/m per Ampere
16
14
12
10
8
6
4
2
0
3
13
23
2
12
22
2
12
22
1
11
21
1
Date
March
April
May
June 1926

Fig. 10 (a)

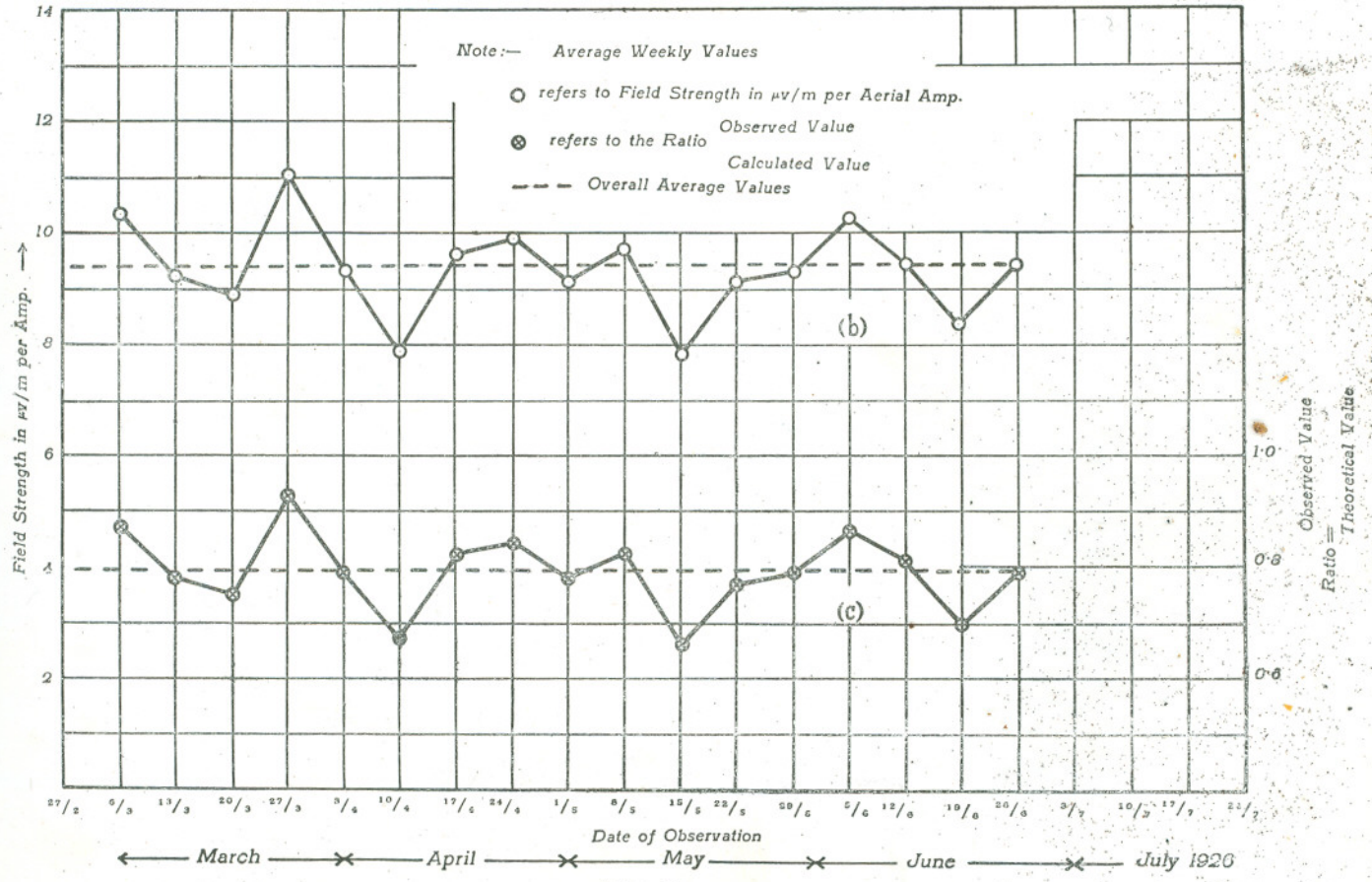
Note:— Average Weekly Values
refers to Field Strength in μv/m per Aerial Amp.
refers to the Ratio Observed Value / Calculated Value
Overall Average Values
(b)
(c)
Field Strength in μv/m per Amp. →
Ratio = Observed Value / Theoretical Value
14
12
10
8
6
4
2
1·0
0·8
0·6
27/2 6/3 13/3 20/3 27/3 3/4 10/4 17/4 24/4 1/5 8/5 15/5 22/5 29/5 5/6 12/6 19/6 26/6 3/7 10/7 17/7 24/7
Date of Observation
March
April
May
June
July 1926

Fig. 10 *(b) & (c)*

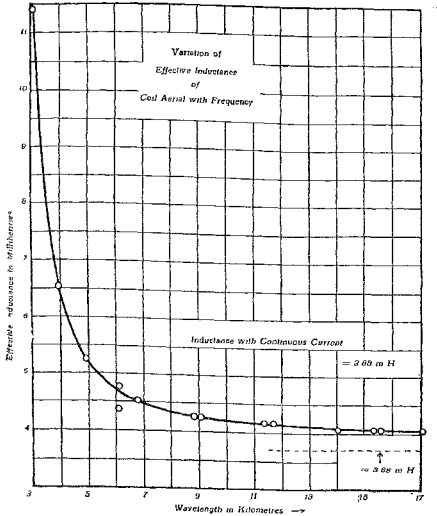
Variation of
Effective Inductance
of
Coil Aerial with Frequency
Inductance with Continuous Current
= 3·88 m H
= 3·88 m H
Effective Inductance in Millihenries
Wavelength in Kilometres

Fig. 12.

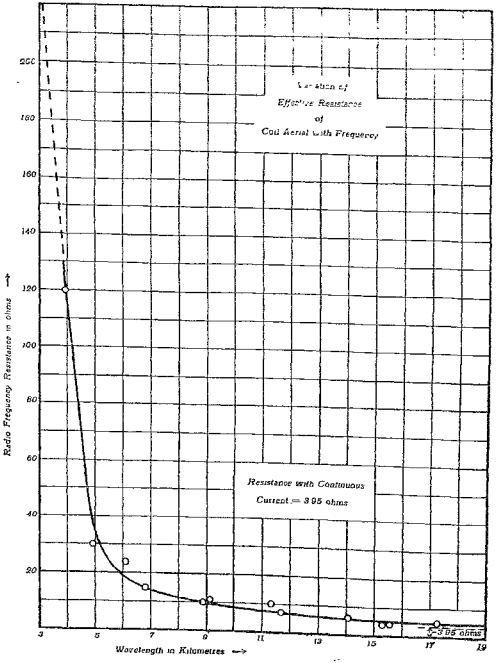
Variation of
Effective Resistance
of
Coil Aerial with Frequency
Resistance with Continuous
Current = 3·95 ohms
= 3·95 ohms
Radio Frequency Resistance in ohms
Wavelength in Kilometres

Fig. 13